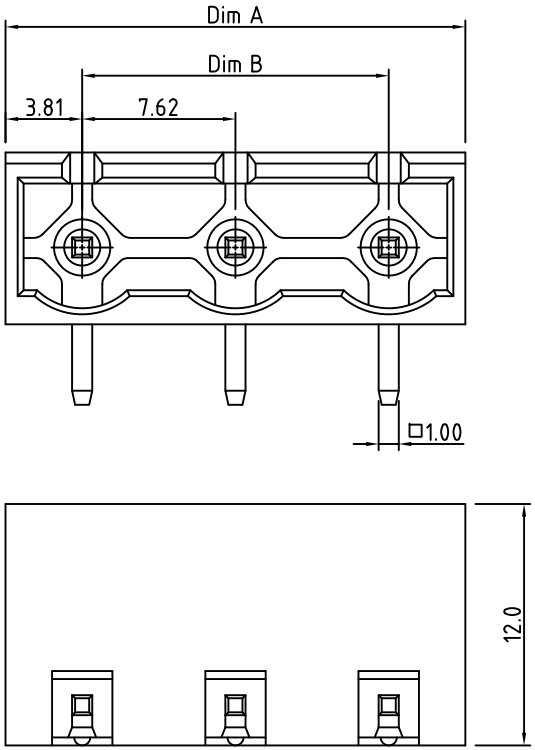

N=Number of contacts

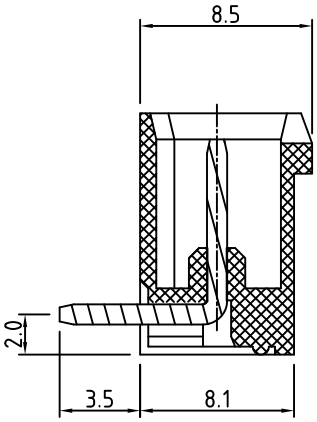

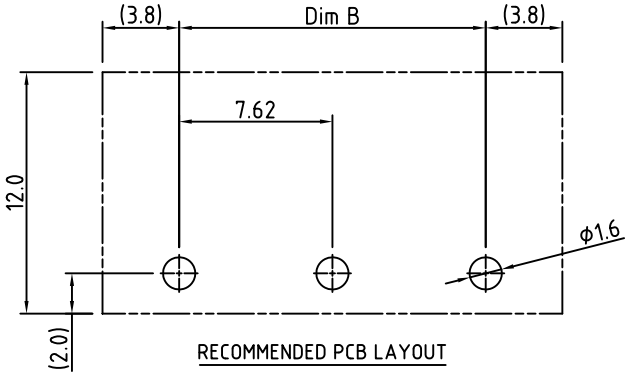

RECOMMENDED PCB LAYOUT

SPECIFICATIONS

Current Rating:	20/15 Amps
Voltage Rating:	300V/750V
Dielectric withstanding:	1.6KV/6KV
Operating Temperature:	−40°C~+115°C
Soldering Temperature:	250°C±10° for 5 seconds
Contact Material:	Copper with Tin Plating
Insulator Material:	Thermoplastic, UL 94V−0
Safety Approval:	c us TÜV

RPLJ- xx J A x A-FG

No. OF POLES
02: 2 POLES
⋮
16: 16 POLES

FG: RoHS Compliant
Pb<40000ppm

J: Black(RAL9005)
B: Red(RAL3001/D)
C: Orange(RAL2011/P)
D: Yellow(RAL1018/A)
E: Green(RAL6018/T)
F: Blue(RAL5015/A)
H: Grey(RAL7035/D)
I: White(RAL1102)

Dimensions	
A	N×7.62
B	(N-1)×7.62

Poles	Tolerance
2P-6P	±0.20
7P-12P	±0.30
13P-16P	±0.40

APTOS Technology CONFIDENTIAL
This document, and all information it contains, are the confidential, propriatary property of APTOS Technology. Disclosure, duplication or distribution of this document, or any information it contains, in whole or part, without prior written permission from APTOS Technology is strictly prohibited

GENERAL TOLERANCE UNLESS OTHERWISE SPECIFIED			
XXX. ± X		.XX ± 0.10	
XX. ± X		.XXX ± X	
X. ± 0.50		X.° ± 1°	
.X ± 0.30		.X° ± 1°	
REV. A	DRAWN	10/27/09	RPLJ Series
DATE 10/27/09	CHECKED		7.62mm Terminal Block Header R/A
SCALE 1:1	APPROVED		PRODUCT NO. RPLJ− XXJAXA−FG
UNIT mm		SIZE A4	FILE NAME: RPLJ− XXJAXA−FG LF APD.DWG

APTOS TECHNOLOGY